SCV, SBV, SSV 3

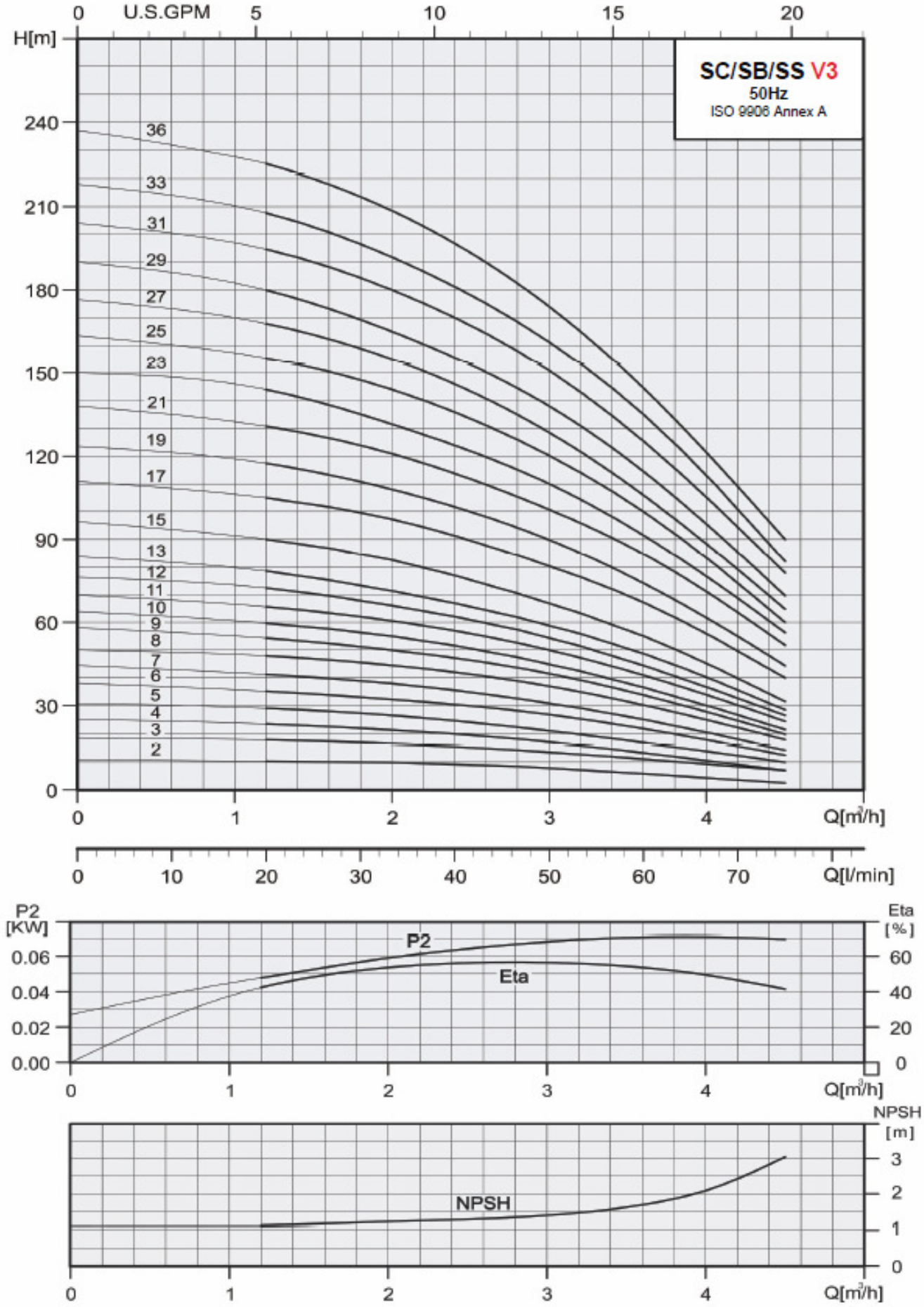
SC/SB/SS V3
50Hz
ISO 9906 Annex A
U.S.GPM
H[m]
Q[m³/h]
Q[l/min]
P2 [KW]
Eta [%]
P2
Eta
NPSH [m]
NPSH

SBV, SSV 3

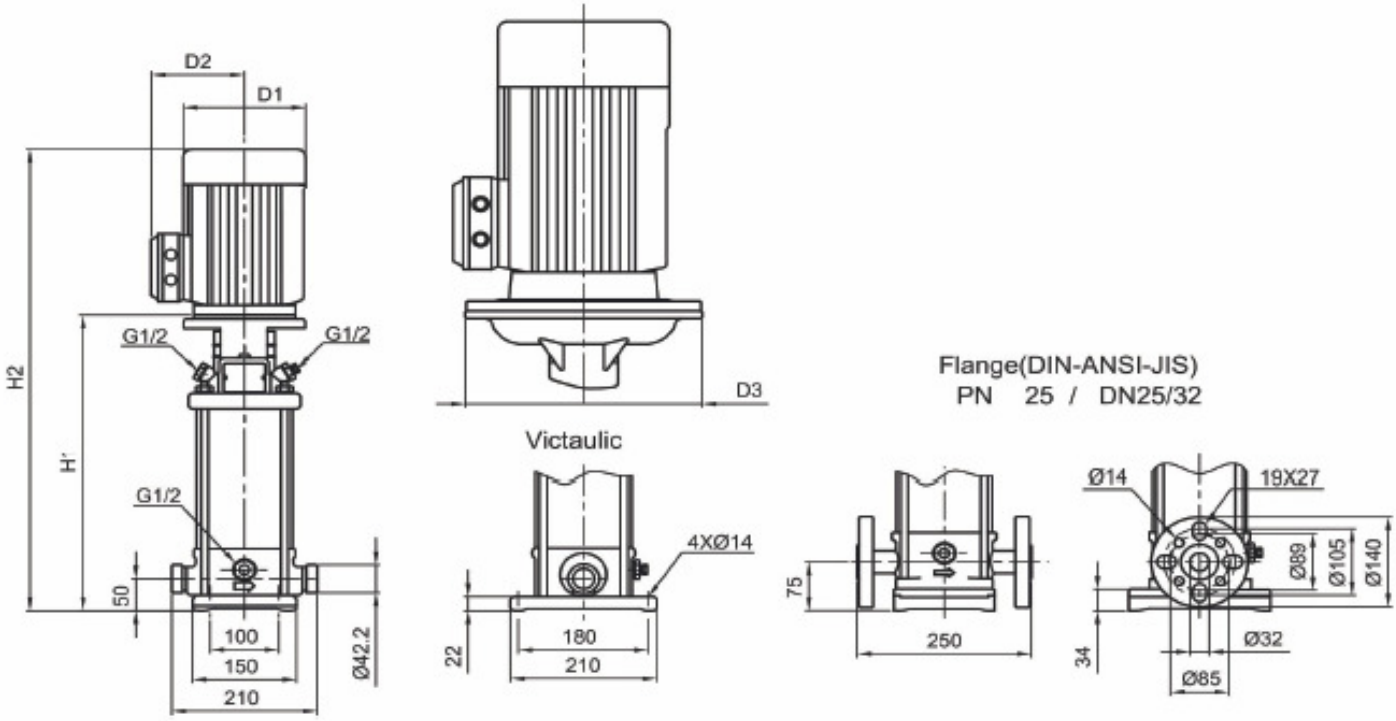

Pump Type	Motor	SBV, SSV								
		Dimension (mm)							Net Weight (Kg)	
	P2	Victaulic		DIN Flange		D1	D2	D3	Victaulic	DIN Flange
	(kW)	H1	H2	H1	H2					
SBV, SSV3-2	0.37	257	448	282	473	141	109	-	16.0	19.0
SBV, SSV3-3	0.37	257	448	282	473	141	109	-	16.0	19.0
SBV, SSV3-4	0.37	275	466	300	491	141	109	-	17.0	19.0
SBV, SSV3-5	0.37	293	484	318	509	141	109	-	17.0	20.0
SBV, SSV3-6	0.55	311	502	336	527	141	109	-	18.0	21.0
SBV, SSV3-7	0.55	329	520	354	545	141	109	-	19.0	21.0
SBV, SSV3-8	0.75	353	584	378	609	141	109	-	21.0	24.0
SBV, SSV3-9	0.75	371	602	396	627	141	109	-	22.0	24.0
SBV, SSV3-10	0.75	389	620	414	645	141	109	-	22.0	25.0
SBV, SSV3-11	1.1	407	638	432	663	141	109	-	25.0	27.0
SBV, SSV3-12	1.1	425	656	450	681	141	109	-	25.0	28.0
SBV, SSV3-13	1.1	443	674	468	699	141	109	-	26.0	28.0
SBV, SSV3-15	1.1	479	710	504	735	141	109	-	26.0	29.0
SBV, SSV3-17	1.5	531	806	556	831	175	140	-	34.5	38.1
SBV, SSV3-19	1.5	567	842	592	867	175	140	-	35.3	38.8
SBV, SSV3-21	2.2	603	878	628	903	175	140	-	38.0	41.6
SBV, SSV3-23	2.2	639	914	664	939	175	140	-	38.8	42.3
SBV, SSV3-25	2.2	675	950	700	975	175	140	-	39.5	43.1
SBV, SSV3-27	2.2	711	986	736	1011	175	140	-	40.3	43.8
SBV, SSV3-29	2.2	747	1022	772	1047	175	140	-	41.0	44.6
SBV, SSV3-31	3	787	1107	812	1132	196	148	-	48.2	51.8
SBV, SSV3-33	3	823	1143	848	1168	196	148	-	49.1	52.5
SBV, SSV3-36	3	877	1197	902	1222	196	148	-	50.1	53.7